MIG-17

WWW.af-model.com
billxiao@af-model.com

Instruction Manual

MADE IN CHINA

Please read this manual carefully before operating this plane

Box Contents

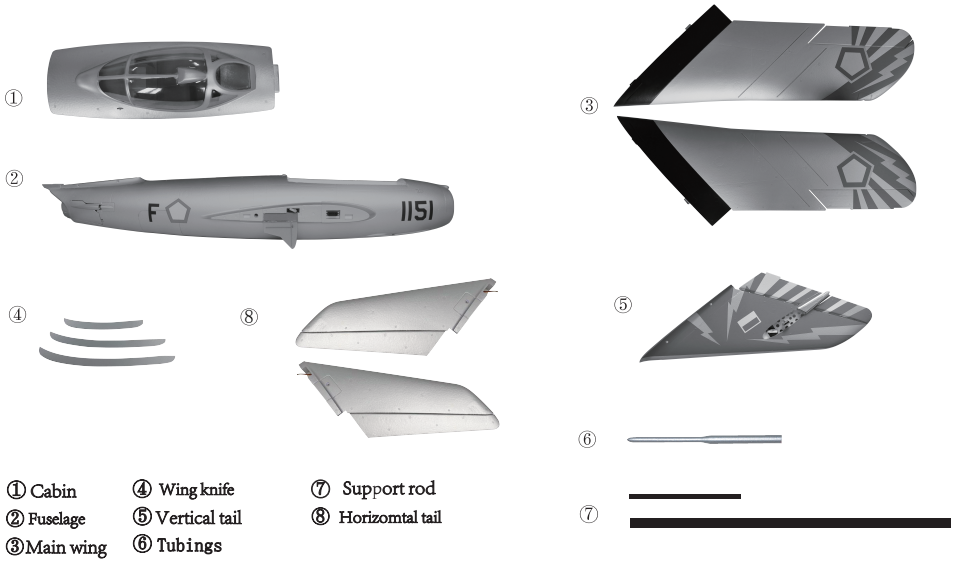

Turbine version Specifications

Main configuration parameters.

	4.5-6Kg	P N P
	12g x 12pcs (Control-Main wing/Vercital tail/Horizontal tail)	Installed
	Main Tank 1350CC	Installed
Battery	3S 2200 mAh High Discharge Li-PO Battery	Installed
Kg	3.6Kg(No Fuel)	P N P

Assembly

1.Installation of nose machine gun trim.

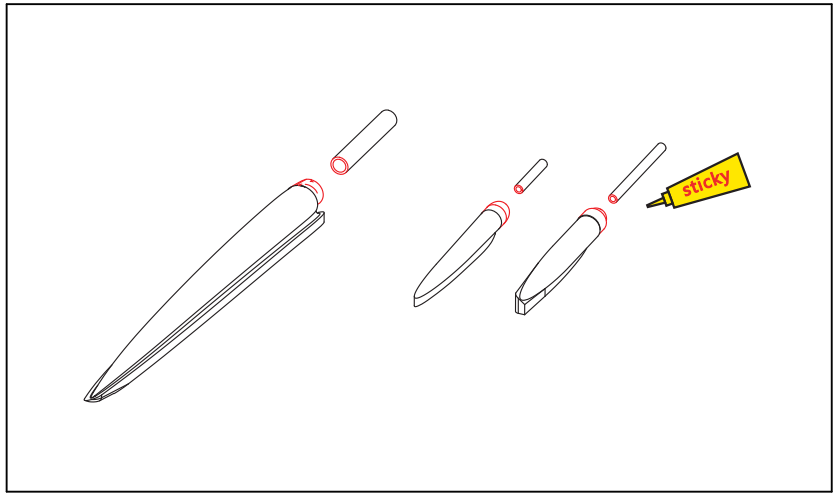

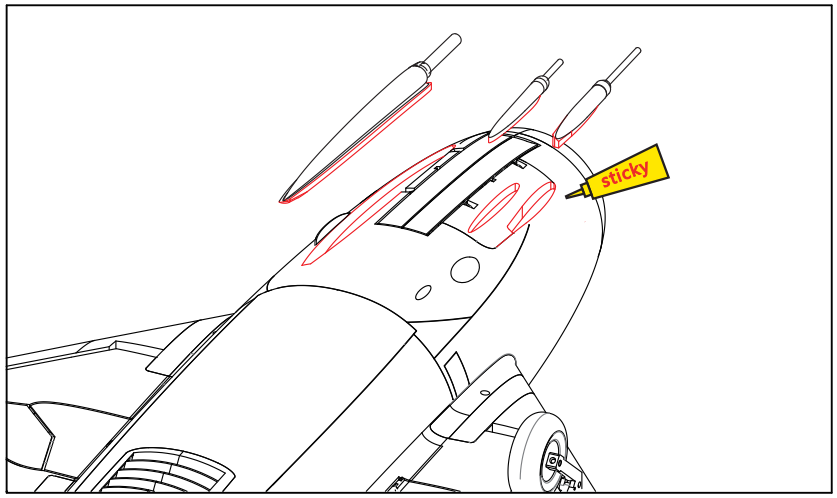

2.Install the caudal fin.

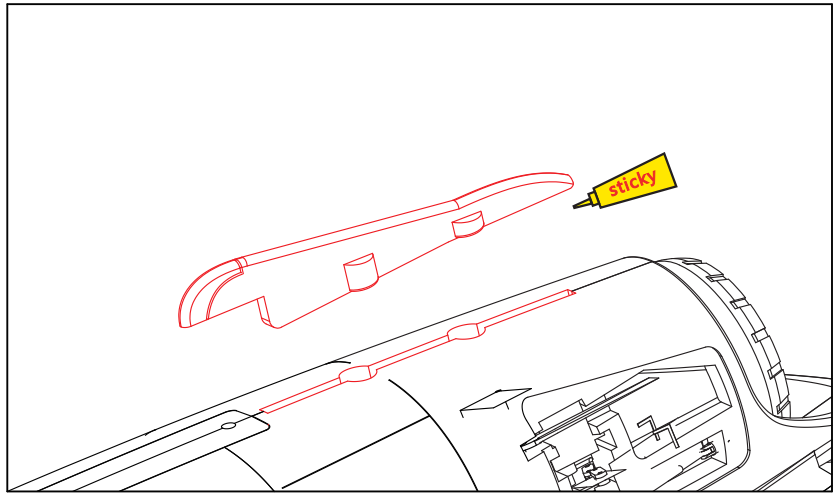

3.Installation of the vertical tail.

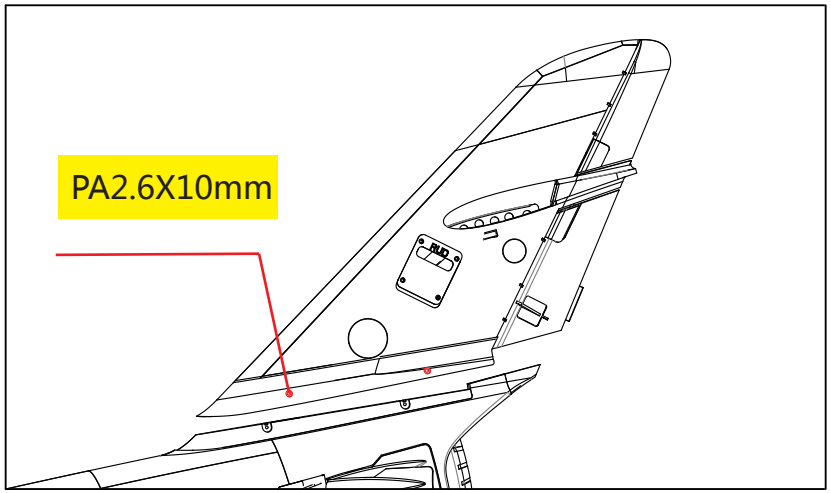

CG LOCATION

Make sure the center of gravity(CG) is as indicated in the following diagram.

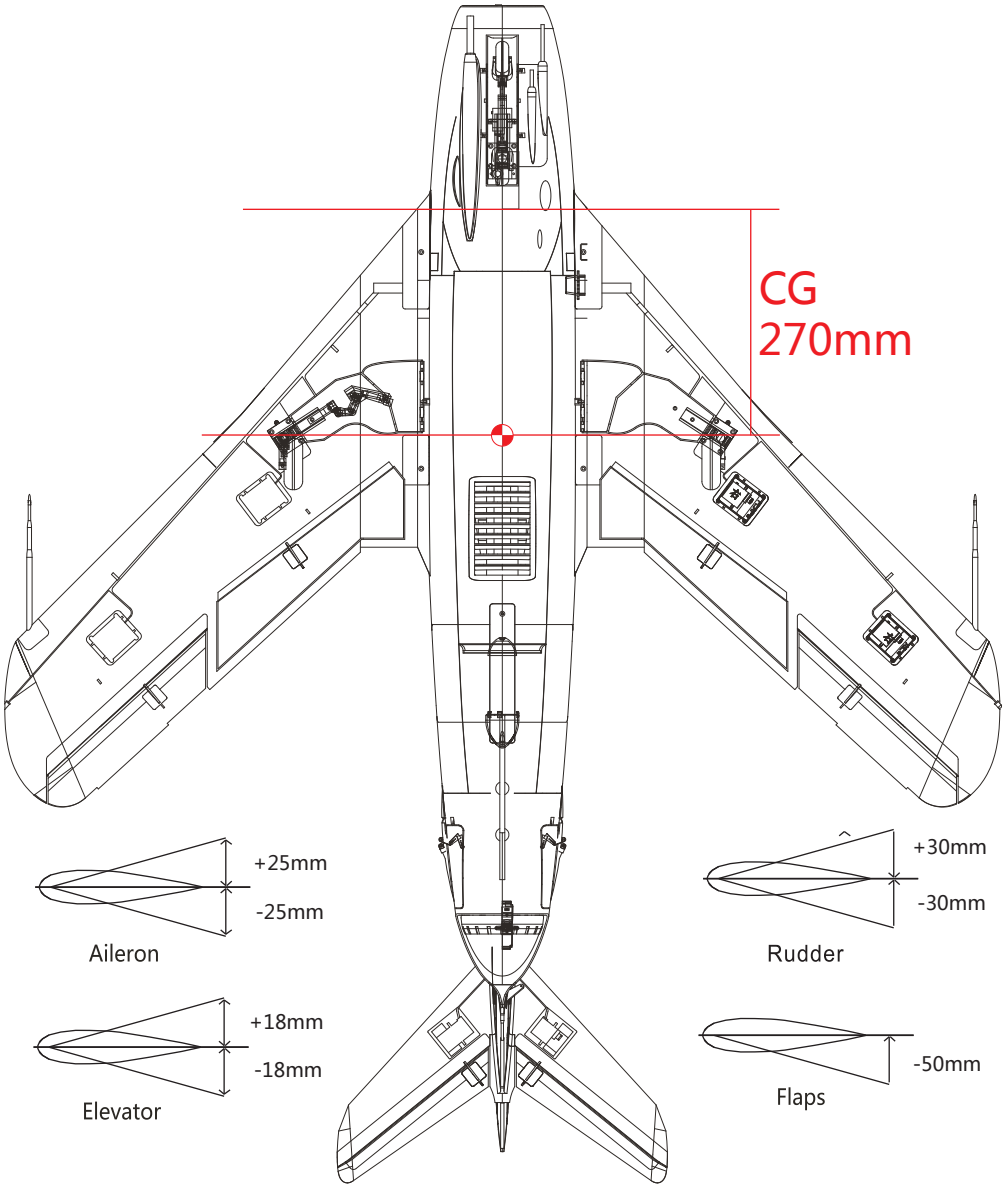

Box Contents

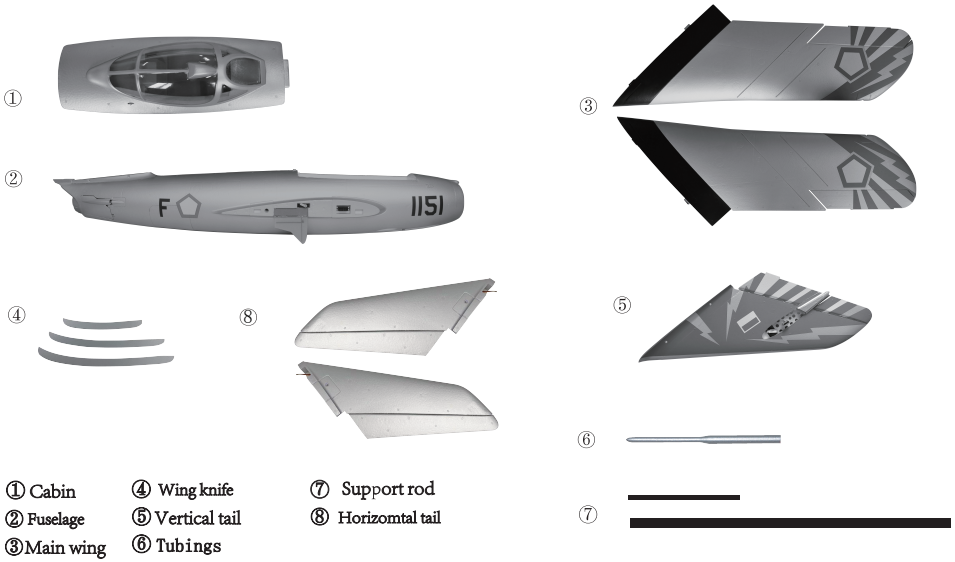

90mm EDF version Specifications

	90mm EDF	PNP
	Brushless Outrunner Motor 3541/1550KV(6S)	Installed
	120A Pro Brushless ESC (with 5A UBEC)	Installed
	Servos:(twin bearings, digital servos) 12g*1pcs 9g*11pcs	Installed
	Battery:6S 5000mAh 40C Li-Po	Required to Complete
	Radio System:2.4GHz 6CH Transmitter and Receiver	Required to Complete
	40g	Installed
	Electronic retraction 3pcs	Installed

Assembly

1.Installation of nose machine gun trim.

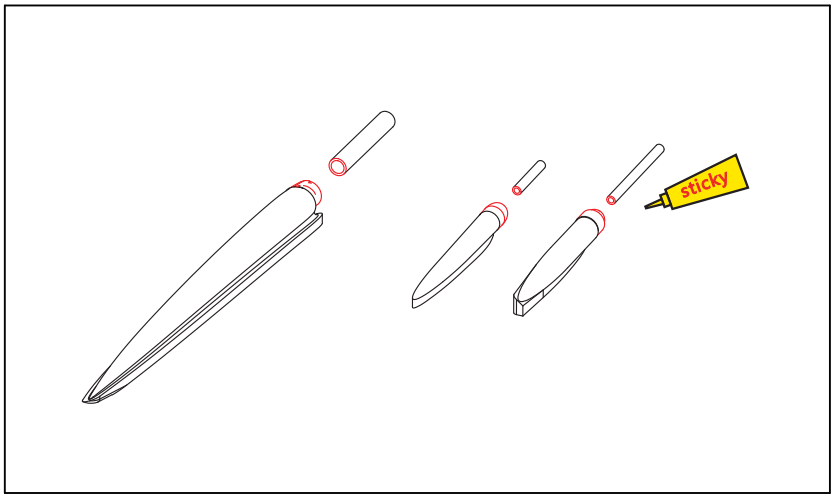

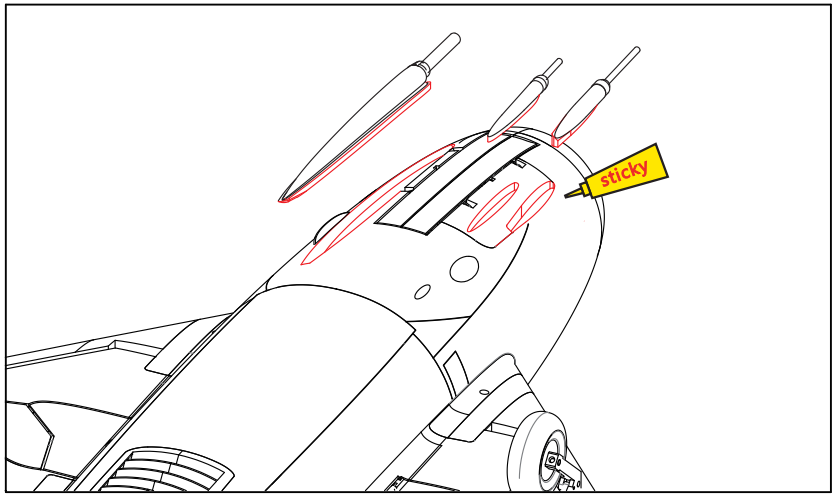

Size parameters

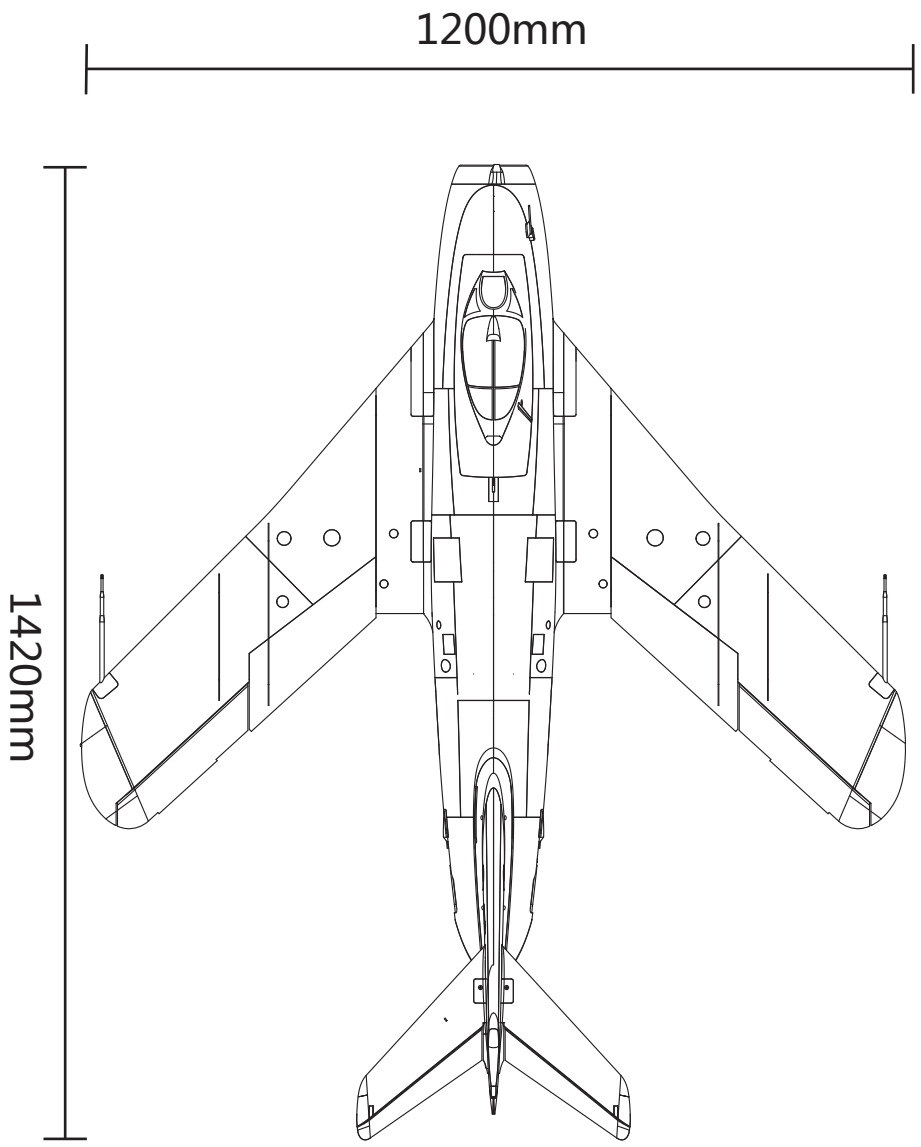

AF-Model.com 艾尔飞模型

4.Install flat tail.

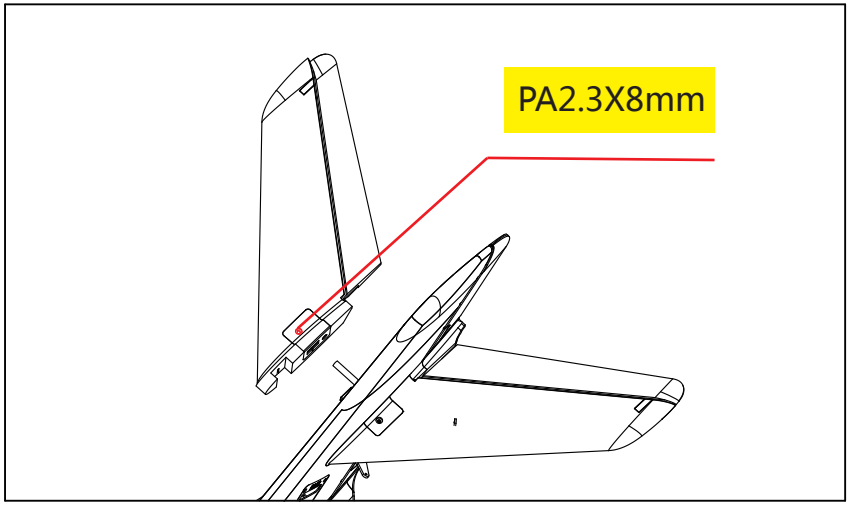

5.Install wing cutters .

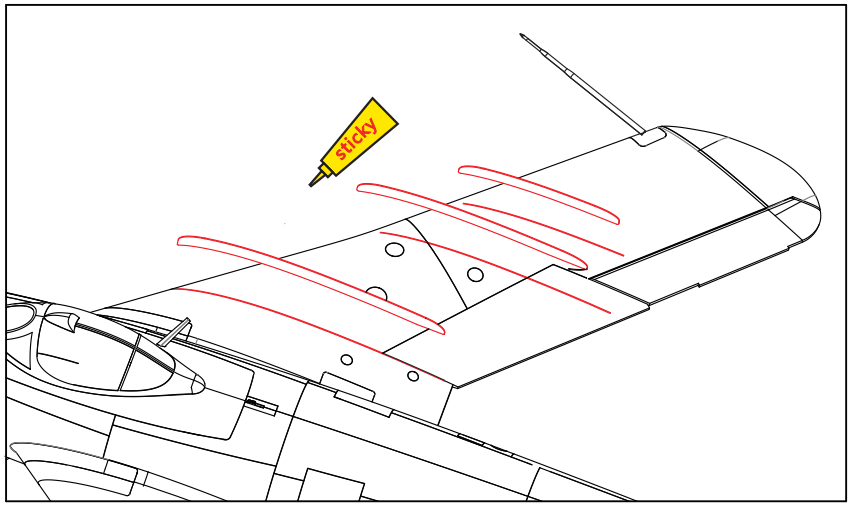

6.Install rear wheel cover.

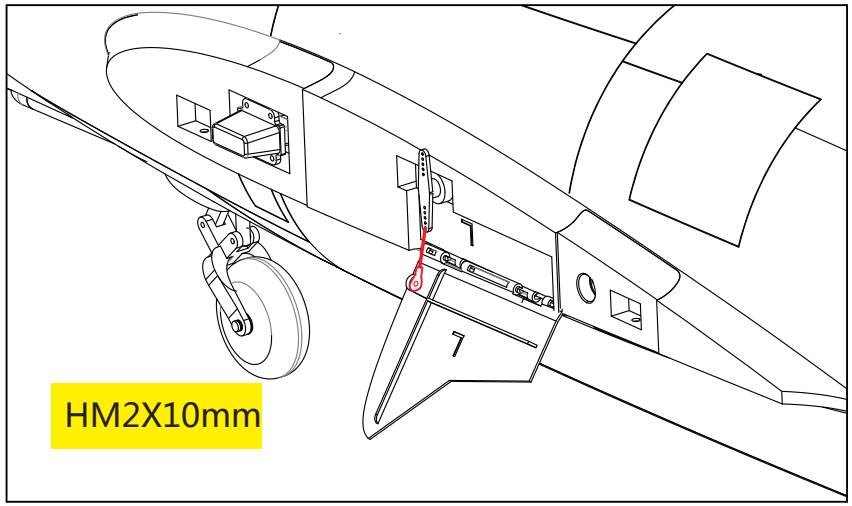

7.Install the wings.

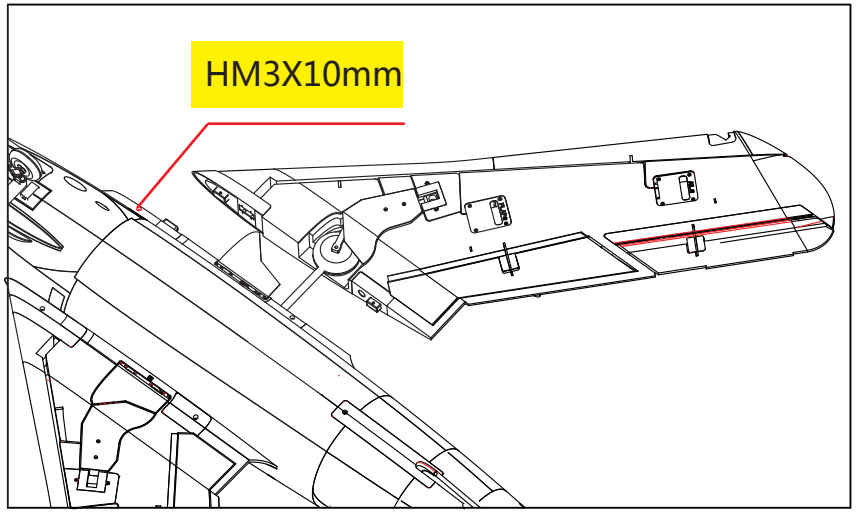

AF-Model.com 艾尔飞模型

8.Install the antenna.

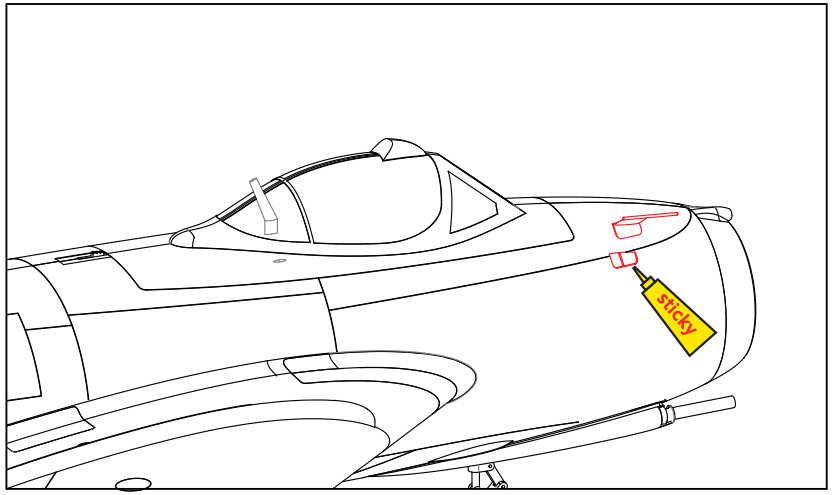
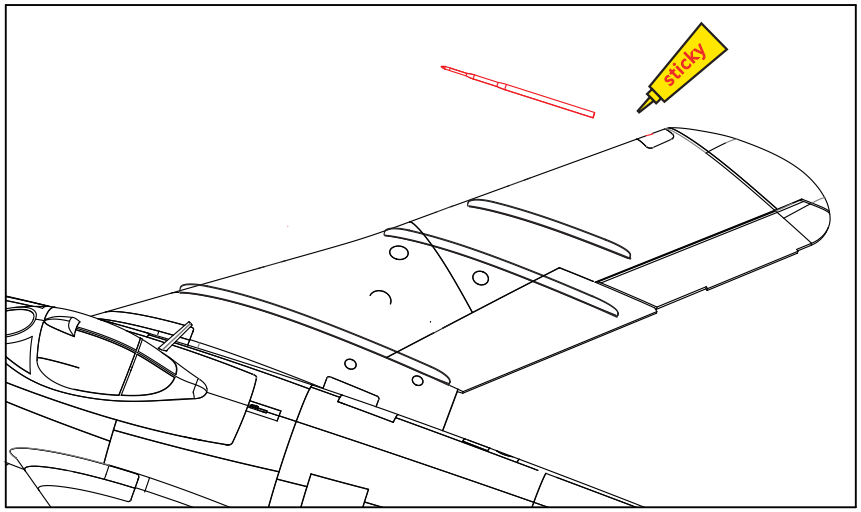
9.Install wing antenna.